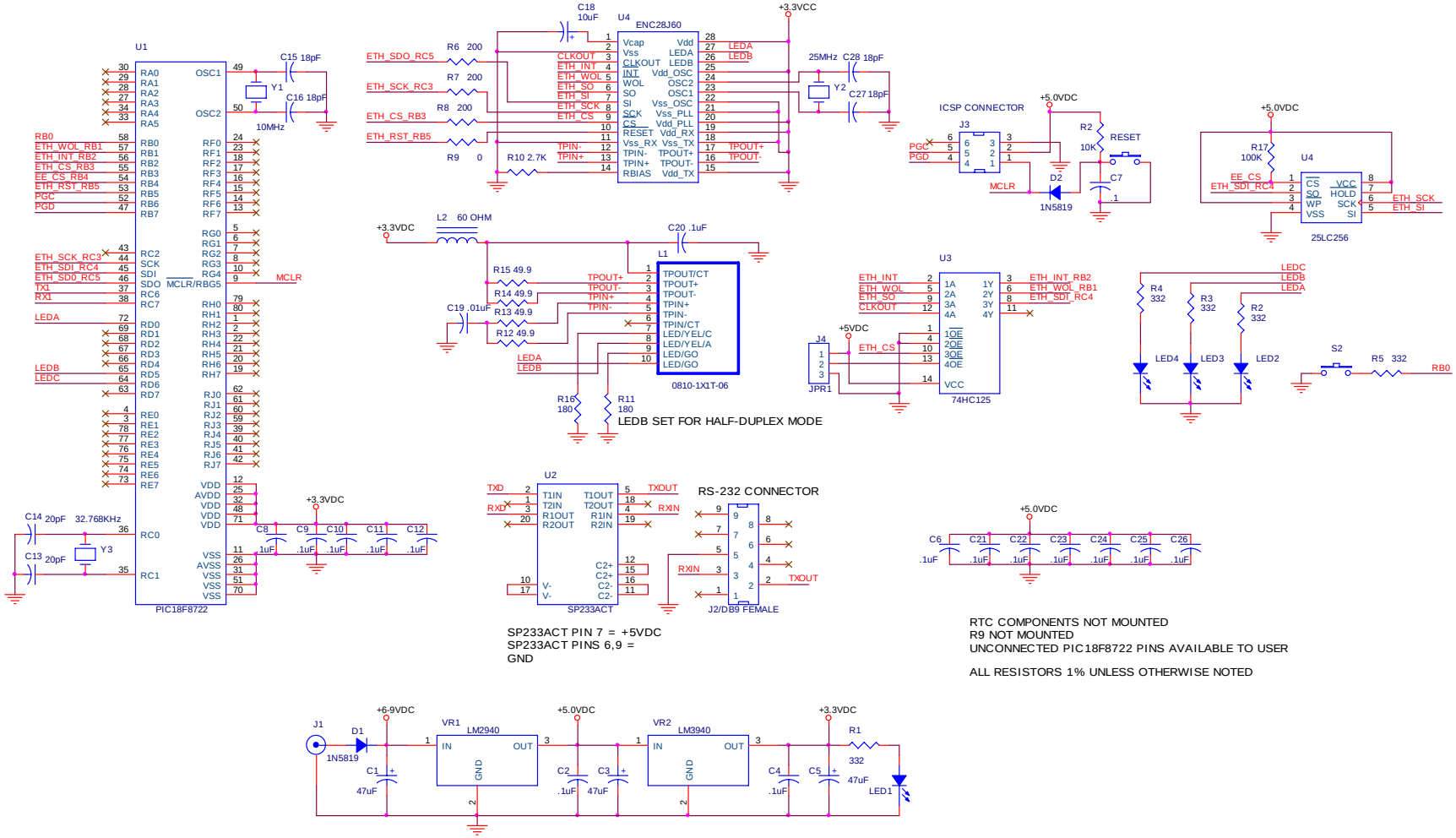

FRAME THROWER II

COPYRIGHT EDTP ELECTRONICS INC. 2006

060602